ITEM	REQ'D	DESCRIPTION	MATERIAL
1	2	9/16 PLATE 4 X 5 1/8	HRS

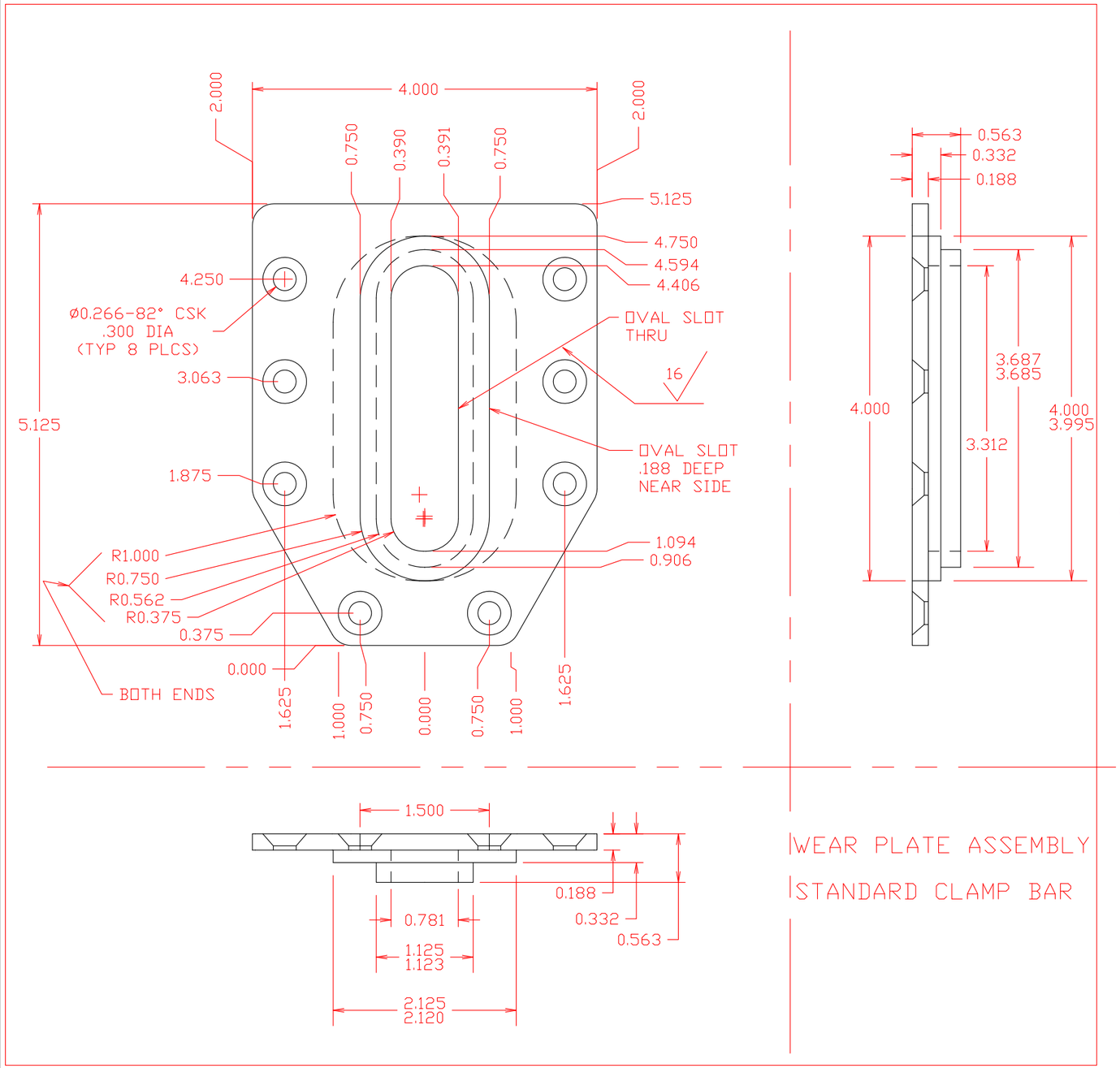

WEAR PLATE ASSEMBLY

STANDARD CLAMP BAR

TOP VIEW

BOTTOM VIEW

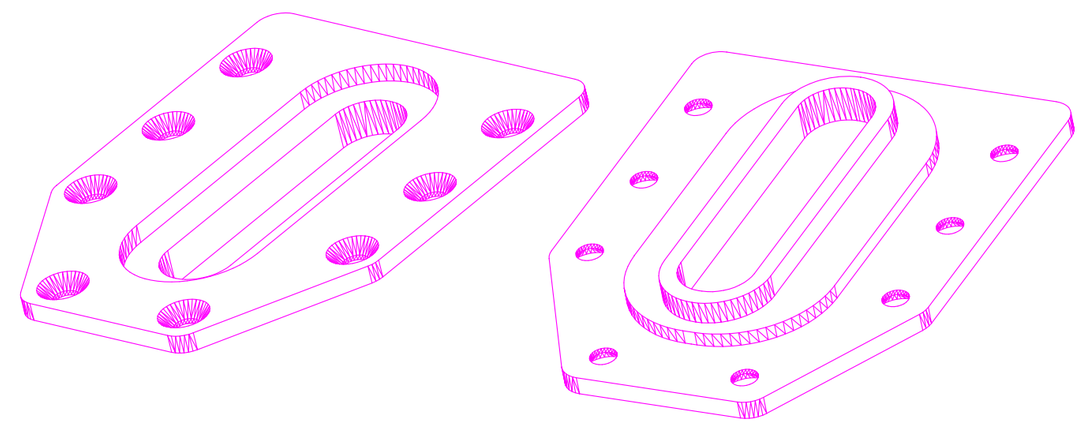

THIRD ANGLE PROJECTION

TOLERANCE UNLESS OTHERWISE SPECIFIED			
FRACTION	DECIMAL	ANGLE	SURF. FIN.
+/- 1/64	.XX +/-.010 .XXX+/-.005 .XXXX+/-.001	X° ± 2 0' X° X' ± 0 5'	▽ -125 ▽▽ -63 ▽▽▽ -32
CONC. T.I.R.	BREAK ALL SHARP CORNERS AND REMOVE BURRS .02 X 45	REQ'D	MATERIAL
.002		--	--

ITEM NO.	REVISION	BY	DATE

SCALE	1 = 1	TITLE	WEAR PLATE CLAMP BAR IRWIN SERIES 50 NON WATER COOLED
CHECKED BY			
DRAWN BY	RMS	ASSY	CH-D00184-T
DATE	1-3-06	DWG. NO.	CH-B00040-T